MANUFACTURED IN U.S.A.

THE DESIGNER OF THIS MODEL, WALTER A. MUSCIANO, IS THE AUTHOR OF THE BOOK: "BUILDING AND OPERATING MODEL AIRPLANES" FUNK AND WAGNALLS, N. Y.

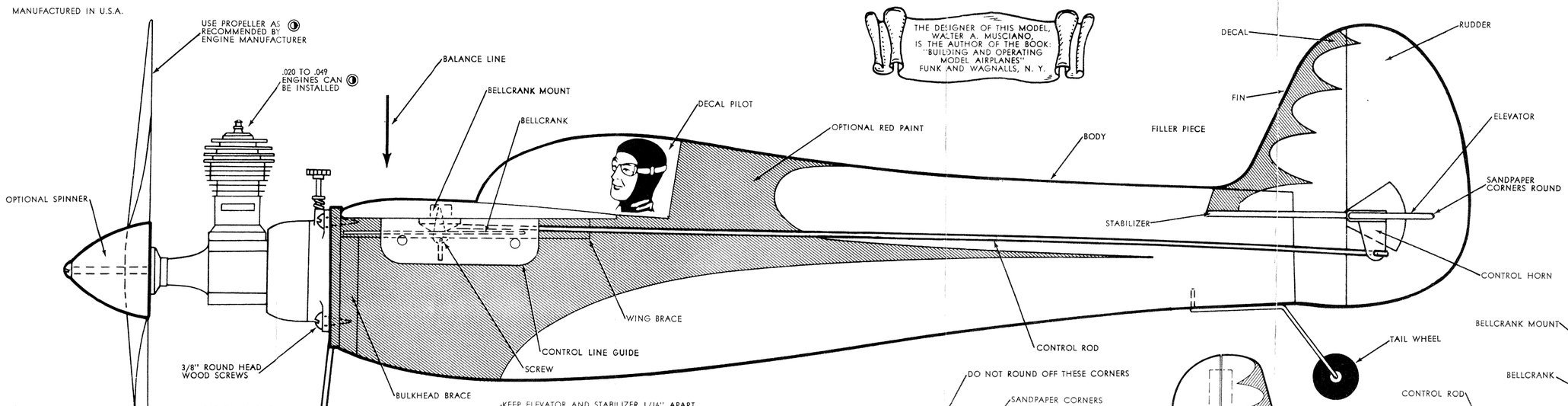

SIDE VIEW (FULL SIZE)

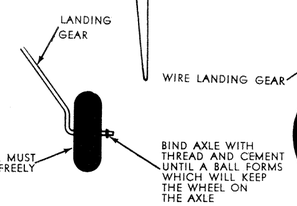

SUGGESTED WHEEL RETAINER

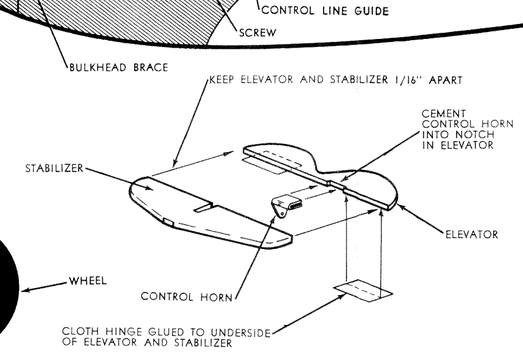

1

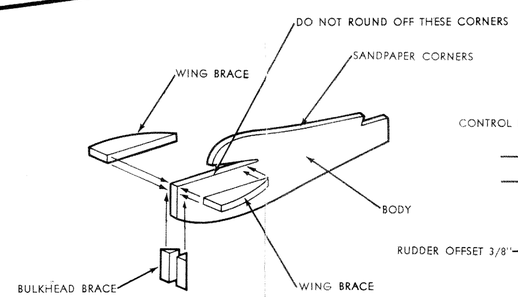

2

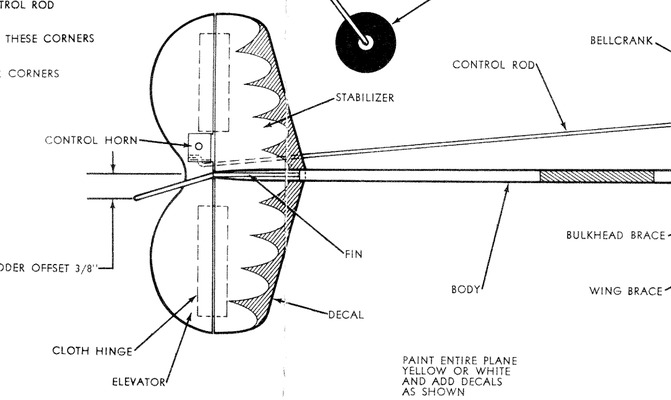

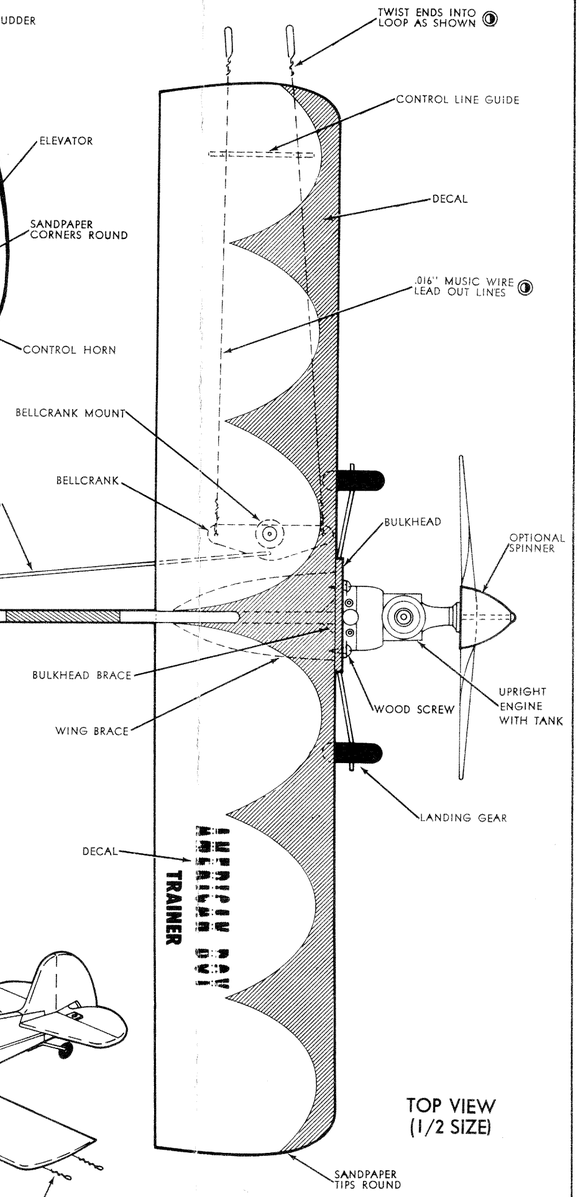

TOP VIEW (1/2 SIZE)

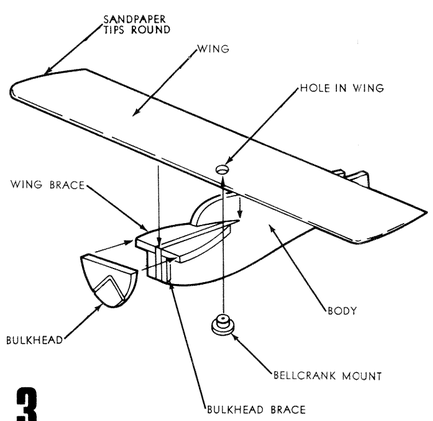

3

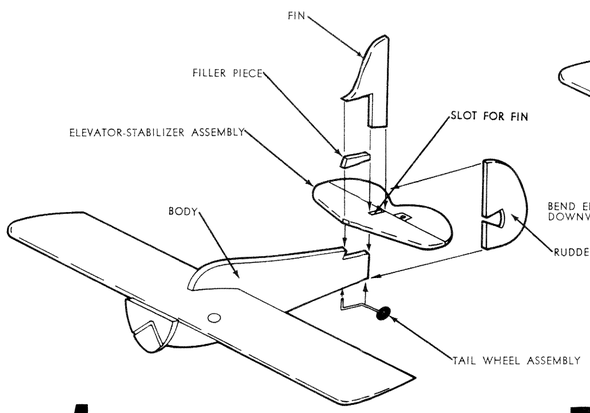

4

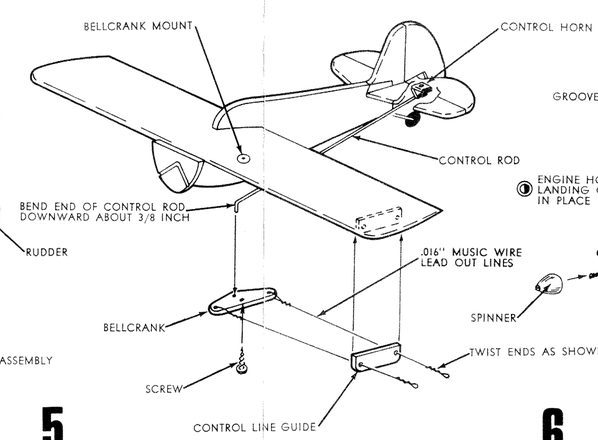

5

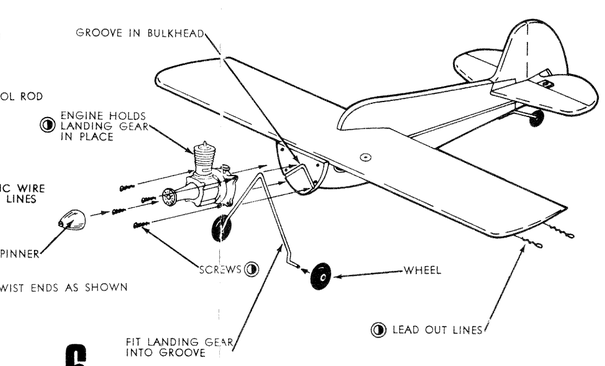

6

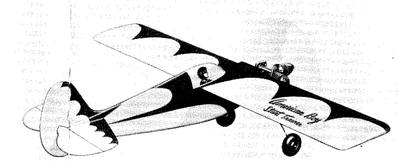

INTRODUCTION

DESIGN of the "American Boy" has been carefully prepared to provide an easy to build and easy to fly training model plane. It is ideal for the beginner who has had little or no experience in building and flying model airplanes. Construction could not be more simple with solid wing and profile body. The engine is exposed for easy operation and maintenance. Controls are gentle and most "over actions" of the control handle are not transmitted to the model in the form of erratic behavior. This is due, basically, to the very long tail moment arm (distance between the elevator hinge and the balance line) which helps to dampen any jerky control by the tyro. The "American Boy" is sure to provide many hours of carefree flying for beginner and expert alike. It has been prepared to require a minimum of cutting or shaping and it falls together with a minimum of effort. So let's begin the assembly of our model.

PLANS AND ASSEMBLY INSTRUCTIONS should be very carefully studied and read several times until every step is carefully understood. Check each part as the instructions are read and lay it on the work table. Be sure you can identify each item. Only then should assembly of the model begin. Do not hurry. Take your time. A hastily assembled model will never be as good as one which has been put together methodically with care and patience.

MATERIAL supplied in this kit is complete and of first quality however, as with all model kits, you will need some additional equipment and material. In order to complete and operate this model you will need: one tube fuel proof slow drying model airplane cement for wood models (do not use plastic or styrene cement which is intended only for plastic models); small bottle fuel proof sanding sealer; small bottle yellow fuel proof dope; small bottle red fuel proof dope (optional); ⅜" flat camel hair brush; small bottle fuel proof thinner; one dozen straight pins; .016" music wire for lead out lines; fine and extra fine sandpaper; sharp knife or single edge razor blade; spool of heavy carpet thread; .049 cubic inch displacement engine; propeller; small bottle clear fuel proofer to protect the decals; and an inexpensive control handle.

PRE-CUT WOOD PARTS are supplied in this kit for your building convenience. In order to keep these parts together on the sheets, and thereby prevent any loss of the smaller pieces, it is necessary not to cut some parts entirely free from the flat sheet. Please do not force the pre-cut sheets apart or they will break. Instead, carefully run a very sharp knife or a single edge razor blade along the cutting line to free each piece and prevent damage to the parts. If any parts break during this cutting operation cement the pieces together at once in order to prevent loss of the pieces. When the model is being assembled it is often necessary to hold parts in place with straight pins until the cement is dry. The pins can be pushed right through one piece and into the other. Thin pieces should have the pins pushed through at an oblique angle. Remove pins when cement is dry.

STEP ONE

ELEVATOR AND STABILIZER must be sandpapered smooth and all corners should be gently rounded as shown on the side view of the plans. Use very fine sandpaper.

CONTROL HORN is fitted into the notch in the elevator and squeezed gently with a pair of pliers. Smear the attachment with several coats of cement.

CLOTH HINGE is used to join the elevator to the stabilizer. Cut the hinge material in the kit into two pieces, one for each side. Place the elevator and stabilizer on the work table up side down with a 1/16" space between them along the hinge line. Pin them to the work table or use weights to hold the two pieces steady. Moisten the gummed hinge pieces and attach to the underside of the elevator and stabilizer as the plans illustrate. Allow to dry thoroughly.

STEP TWO

WING BRACES are cemented securely to each side of the body. These must be located in the forward corner of the body so the top of the brace is flush with the wing cut out in the body and the front of the brace is flush with the front of the body.

BULKHEAD BRACES are now firmly cemented to each side of the body and to the underside of the wing braces. Be sure that the forward surface of the bulkhead braces are flush with the front of the body.

SANDPAPER the body with fine sandpaper to round off all corners except where the stabilizer, bulkhead and wing attach. Taper the fuselage rear as shown in the top view. Finish off with extra fine sandpaper.

STEP THREE

BELLCRANK MOUNT is now well cemented into the hole in the wing. When dry, apply several coats of cement around this assembly.

SANDPAPER the wing with fine and then very fine sandpaper. Round off the wing tips and smooth the surface of the wing.

WING is cemented atop the wing braces and into the notch in the body. Slide the wing into the notch until the leading edge is even with the wing braces and front of the body. Use plenty of cement.

BULKHEAD is now cemented to the front of the body, bulkhead braces, wing braces, and leading edge of the wing. Smear cement on these surfaces and press the bulkhead in place. Remove the bulkhead and let the cement dry. Repeat this procedure and press the bulkhead in place permanently.

STEP FOUR

TAIL WHEEL is installed by carefully forcing the end of the tail wheel strut into the bottom of the body until the horizontal portion touches the bottom of the body. Smear this with several coats of cement.

ELEVATOR-STABILIZER ASSEMBLY is now installed atop the rear of the body. The stabilizer is cemented in the recess so the slot in the stabilizer is even with the rear of the body.

FILLER PIECE must be cemented in place on the stabilizer. When dry, round off the top and taper to fit the rest of the body.

FIN should now be sandpapered and cemented to the filler piece and body by passing it through the slot in the stabilizer.

RUDDER is sandpapered and cemented to the fin. It is important to offset the rudder to the right as the top view illustrates.

STEP FIVE

ALL JOINTS should be recemented several times, especially the wing and bulkhead attachments. Wiping cement along the outside of these joints not only improves the strength but also enhances the appearance.

PAINTING should not be started until the model has been given a thorough final sandpapering. Before the color is applied it is advisable to brush on at least three, and preferably more, coats of a commercial balsa wood grain sealer. This will seal the grain and produce a better paint job. Do not depend on the paint to seal the wood. Professional model builders often apply twenty or more coats of sealer to get a smooth finish. The sealer, colored dope, and cement should be made by the same manufacturer. Sand lightly after each coat of sealer is dry. Use worn sandpaper so it does not scratch the surface. Paint your model the colors noted on the plan. Either brush the colors on or use a spray can. Apply at least three coats of colored model airplane dope for a nice appearance. Do not neglect to seal and paint the bulkhead. Use paper masking tape to insure clean color separation lines on painted trim which is optional. The forward portion of the body need not be painted a different color than the rest of the plane.

DECALS are applied in the locations shown on the plans. Separate the various pieces with scissors before dipping them in warm water. Blot dry on the model with a soft cloth. The decals must be protected from the fuel with a clear solution called fuel proofer. If this is not applied on the decals when they are thoroughly dry the fuel will cause them to melt and will ruin them.

CONTROL LINE GUIDE is sealed, painted, and cemented to the wing in the exact location shown in the top and side views.

LEAD OUT LINES are now cut to length and attached to the bellcrank by twisting with a pair of pliers. Twist the other end into a loop as shown.

CONTROL ROD is measured on the full size side view and the forward end is bent as shown. Remove the excess wire. Slip the offset end into the hole in the control horn.

BELLCRANK is screwed to the bellcrank mount after the control rod is attached to it. This must move freely but not loosely. Slip the lead out wires through the holes in the control line guide.

TOUCH UP the paint as required.

STEP SIX

WHEELS can be held on the landing gear by a variety of methods. The plans illustrate one of the easiest and most effective methods of wheel retention for small models. Be sure the wheels can turn freely. The easiest method of keeping the wheels on the axles is to apply a drop of cement to the end of the axle after the wheel is in place. Quickly bind the end of the axle with thread directly over the drop of wet cement. Apply more cement and then more thread until a small ball of cement and thread is formed which will hold the wheel in place. Finish off with a coat of cement.

CLEAR FUEL PROOFER must be applied over the decals to protect them from the alcohol fuel. If you did not use fuel proof cement and dope the entire model should receive a coat of clear fuel proofer. Clear fuel proof dope is not a substitute for clear fuel proofer.

LANDING GEAR fits in the notch in the bulkhead and is held in place by the engine.

ENGINE is held to the bulkhead with round head wood screws and should be installed now. Do not make the screws too tight because they may strip the wood and lose their hold in the plywood.

FLYING

BALANCE the model by placing the tip of one finger of each hand under the wing at the point indicated on the plans. If the model is tail heavy; gently bend the landing gear forward. Never fly a model plane that is tail heavy because the controls will be erratic. It is permissable to fly a model that is slightly nose heavy because in this condition it is merely less responsive to the controls.

FLYING EQUIPMENT for this model consists of two lengths of carpet thread, each 25 feet long; and a ½" thick piece of wood about 5 inches long. Firmly tie one length of carpet thread to each end of the stick and tie the other end of the lead out wires being certain that the lines are of equal length. Paint the end of the stick that is connected to the forward control wire any color you choose. This is to identify the top or "up" portion of the control handle. Place the handle in the circle center and place the model at the edge of the flight circle facing downwind. An inexpensive plastic control handle is available at most hobby shops or from Scientific. See the Spare Parts List.

ENGINE STARTING should follow the manufacturer's instruction. Once the engine is running smoothly have a helper hold the model on the ground while you walk to the control handle.

TAKE OFF is downwind. Never take off into the wind or when the wind is gusty. With the control handle held vertically in your hand, with the colored end up and lines taut, signal your helper to release, not push, the model. Keep the controls neutral and the plane will take off. Keep turning with the model and do not let it get ahead of you. When you raise your arm the model will climb because the elevator will tilt up. When you lower your arm the model will dive because the elevator will tilt down. Do all of your climbing when the model is traveling with the wind and all of your diving when the model is traveling against the wind.

LANDING is quite simple. When the engine stops continue to turn and guide the model to a safe landing. Smooth paved surfaces are recommended such as a school yard or parking lot.

HAPPY FLYING!

◑ ITEMS MARKED THUS ARE NOT INCLUDED IN KIT

NOTICE—Engine fuel and clear dope will dissolve decals. After decal is applied to model and is thoroughly dry give it one coat of "Aero Gloss Clear Fuel PROOFER." (Do not use fuel proof clear dope)

©Copyrighted by Scientific Models, Inc.

Kit 24 AMERICAN BOY
SPARE PARTS LIST

Plans	.50
Decals	.50
Body	.75
Wing	.75
Tail sheet	.35
Control rod	.15
Landing gear	.25
Plywood bulkhead	.15
Wheels ... pr.	.20
Tailskid & wheel	.25
Control horn	.10
Bellcrank	.10
Bellcrank mount	.10
Control handle	.29
Spinner	.19

Add 75¢ to order for postage & handling. Be sure to state name of model.

772

EASY TO BUILD AND FLY MODEL AIRPLANE

Scientific AMERICAN BOY

Kit No. 24

CONTROL LINE TRAINER

CONTROL LINE MODEL AIRPLANE FOR .020 TO .075 ENGINES

DESIGNED BY WALTER A. MUSCIANO
SCIENTIFIC MODELS INC.
340 SNYDER AVE.
BERKELEY HEIGHTS, N. J. 07922